mamava® XL V6 Seismic Kit Installation Guide

service@avapods.com
(802) 347-2111



Thank you for supporting breastfeeding parents with a clean and private lactation space. Both Mamava Flex and XL podas have a Seismic Kit offering that anchors the pod to the floor and meets building safety requirements. If your facility requires seismic anchoring, here is an overview of what you will need to do to prepare your site before pod installation.

1. **Seismic Kit ships separately in advance of the pod.** If you ordered a pod with a Seismic Kit addition, the Seismic Kit will be shipped to you in advance of your pod's arrival. The kit includes components for part 1 of the seismic anchoring system installation—which you will need to complete prior to the pod assembly—and part 2, which occurs as part of the pod installation. Hold onto all parts until your pod assembly is complete.

2. **Complete part 1: Drill anchor holes, install anchors, and fasten seismic brackets to the floor.** It should take 1 person approximately 1 hour to install the Seismic Kit. You are responsible for drilling the anchor holes in the concrete floor where the pod will be placed, installing anchors, and fastening the brackets to the floor. The Seismic Kit must be installed on an even and level surface. Pod assembly—even with our professional installation services—cannot occur until this step is complete.

3. **For pods with professional installation: Schedule pod installation and anchoring.** Once you've completed part 1, please email service@avapods.com to let us know. Our certified third-party installers will contact you to schedule a time to assemble your pod and complete part 2 of the seismic anchoring system installation, ensuring the pod is properly anchored to the floor.

   For pods with self installation: Complete part 2 and assemble pod onto seismic anchoring system. Once you've completed part 1, you can begin to assemble your pod foundation onto the seismic anchoring system. Please reference the **Mamava XL V6 Assembly Guide** and complete all steps under Frame, Chassis + Seat Bases. Once the floor frame and chassis is in place, return to this document to complete part 2.

Mamava, Inc. © 2026. AVA PODS™ is a trademark of Mamava, Inc.

Tools, Parts + Hardware

Not included



Hammer Drill with 1/2" Masonry Drill Bit



Permanent Marker



Tape Measure



Painters Tape



Eye Protection



5 mm Hex Key



Hammer



3/8" Drive, Deep 3/4" Hex Socket



Phillips Head #2 Screwdriver



3/8" Torque Wrench



Ratchet + 9/16" + 10 mm Sockets/Wrench



Level

Provided | PART 1

Complete prior to pod assembly

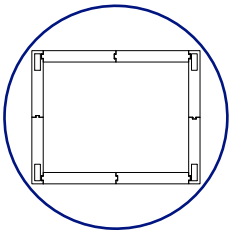

(1) Complete XL V6 Drill Template

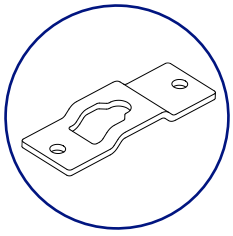

(4) Seismic Brackets

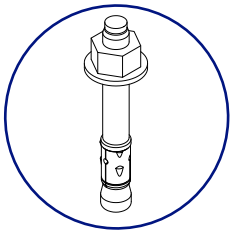

(8) Hilti Concrete Anchors

(Includes washer, hex nut)

Drill + Install Hilti Anchors

PART 1

TOOLS AND PARTS

- 3/8″ Drive, Deep 3/4″ Hex Socket
- XL V6 Seismic Drill Template
- (8) Hilti Concrete Anchors
- Permanent Marker
- Painters Tape
- Hammer Drill with 1/2″ Masonry Drill Bit
- Hammer
- Tape Measure
- Level

1. Ensure that you install the Seismic Kit on an even and level surface.

Assemble the drill template by snapping together the (8) pieces for a Mamava XL V6 pod.

XL POD TEMPLATE

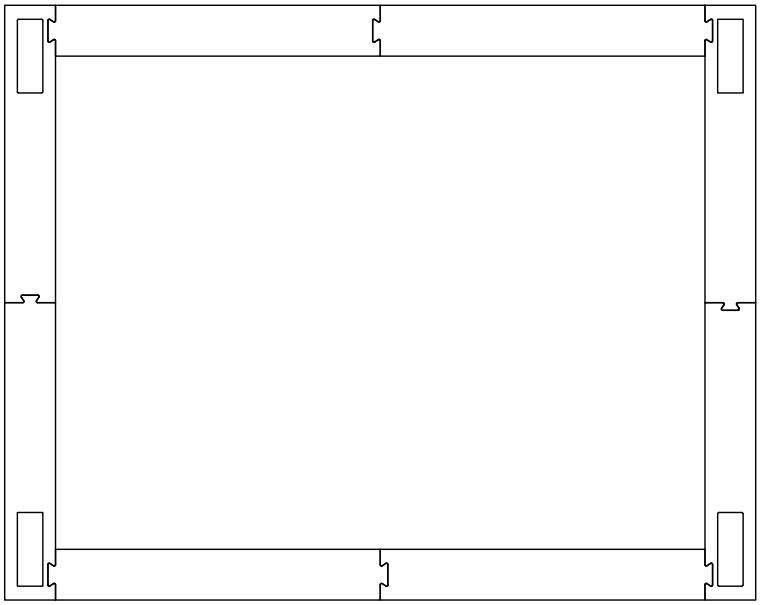

2. Place the drill template in the center of the desired pod location based on the placement recommendations in Receiving Your Pod: How to Prepare for Delivery. Reminder: the seismic anchoring system requires drilling into a concrete floor.

For ease of assembly and future service needs, allow for 43″ to the left and right of the template, 29″ behind the template, and 39″ in front of the template for XL pods.

The power cord exits the bottom of the back right wall panel, just above the floor. Be sure XL pods are placed within 10′ of a standard GFCI outlet.

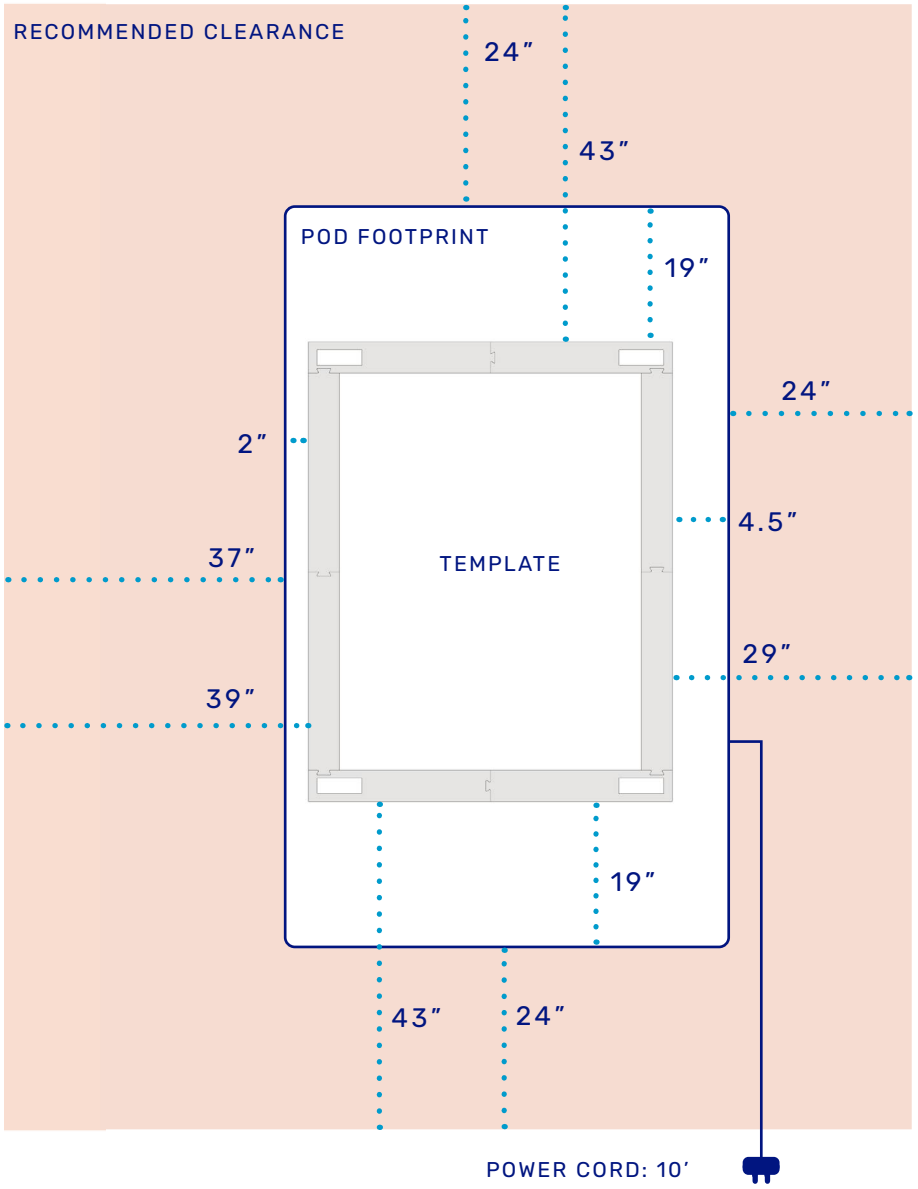

3. Place a seismic bracket into each of the slots located on the ends of the drill template. Ensure that the bracket slot opens up away from the center of the pod as shown in the image.

Before moving onto the next step, take two corner-to-corner measurements to ensure the template is square and all measurements are correct. The measurements should be equal.

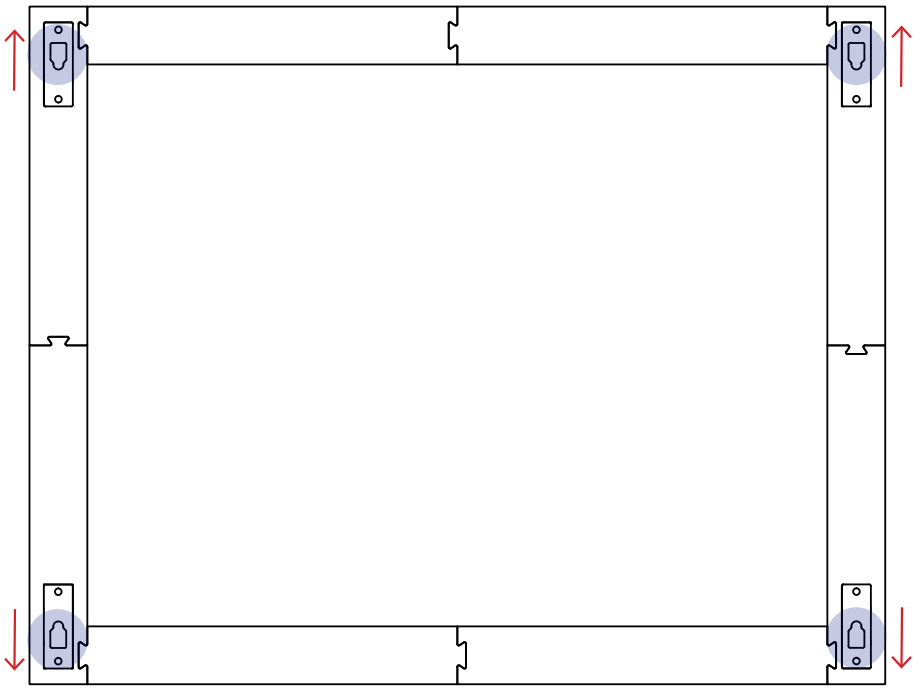

4. Use a permanent marker to mark the (8) bracket anchor hole locations on the floor.

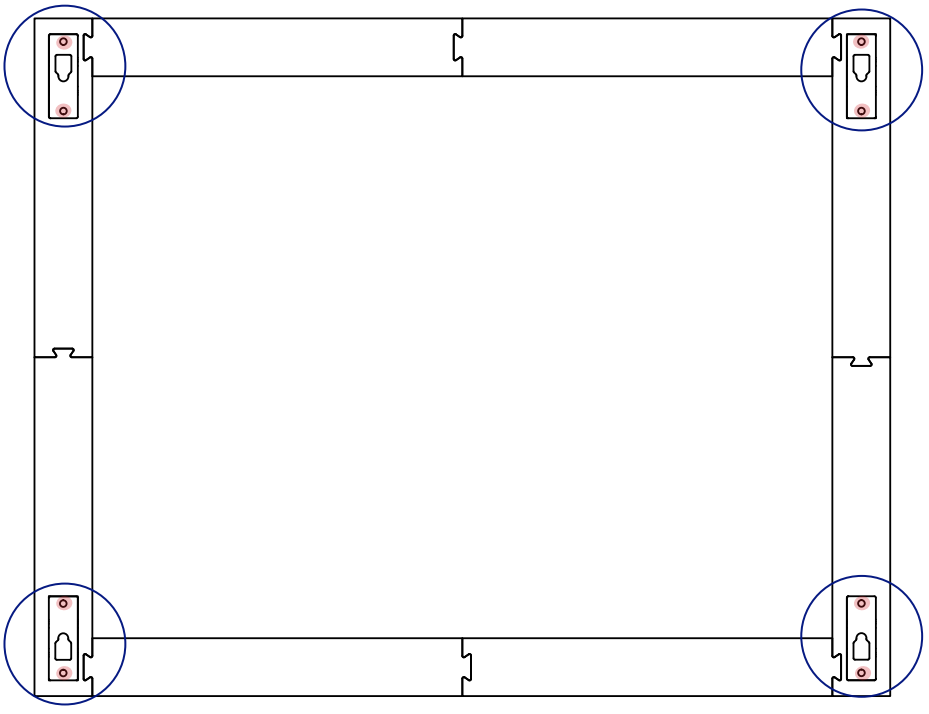

5. Remove the drill template. The (8) bracket anchor hole locations should be visible on the floor.

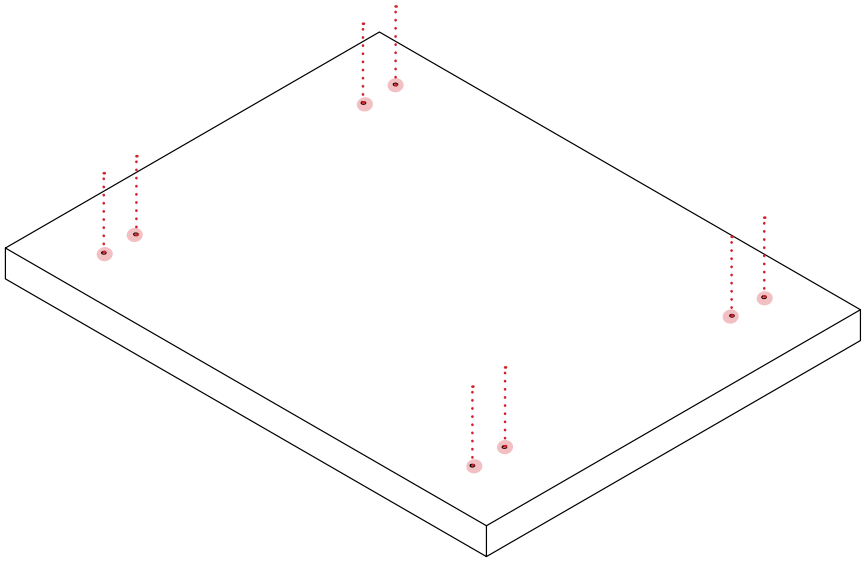

6. Wrap a piece of painters tape around the drill bit 2 5/8″ from the tip of the drill for a depth marker.

Use a hammer drill with a 1/2″ masonry bit to drill anchor holes into each of the (8) locations marked on the floor. Stop drilling once the tape on the drill makes contact with the floor.

Ensure the drill bit stays vertical throughout drilling.

7. Use a hammer to insert each of the (8) Hilti anchors into the pre-drilled anchor holes in the concrete floor. Be sure to make contact with the threaded end of the screw and NOT the nut. Stop hammering when the Hilti concrete anchor comes to rest.



8. Remove the (8) Hilti nuts and washers from the top of the anchors.



Fasten Brackets to Floor

PART 1

TOOLS AND PARTS

- (4) Seismic Brackets
- Torque Wrench
- 3/4″ Hex Socket

1. Align the holes in the brackets with the Hilti anchors in the concrete floor and drop into place. Ensure you are using the same orientation as when you marked the holes.

2. Secure the bracket by threading the (8) Hilti nuts and washers onto the anchors. Use the 3/4″ socket on a torque wrench (with torque set to 50 ft/lb) to tighten the (8) Hilti nuts and secure the anchor in place.

3. To comply with OPM-0733, testing and special inspection of expansion anchors shall be performed by an approved independent agency employed by the facility owner per CBC §1704A, §1910A.5, AND CAC 7-149. All reports shall be sent to the inspector of record, owner and the architect or engineer in responsible charge. To complete the testing: After installation, wait 24 hours. Then, using a calibrated torque wrench, test 50% (4 of the 8 Hilti anchors) to ensure that at 50ft-lb the nut does not move more than 1/2 turn.

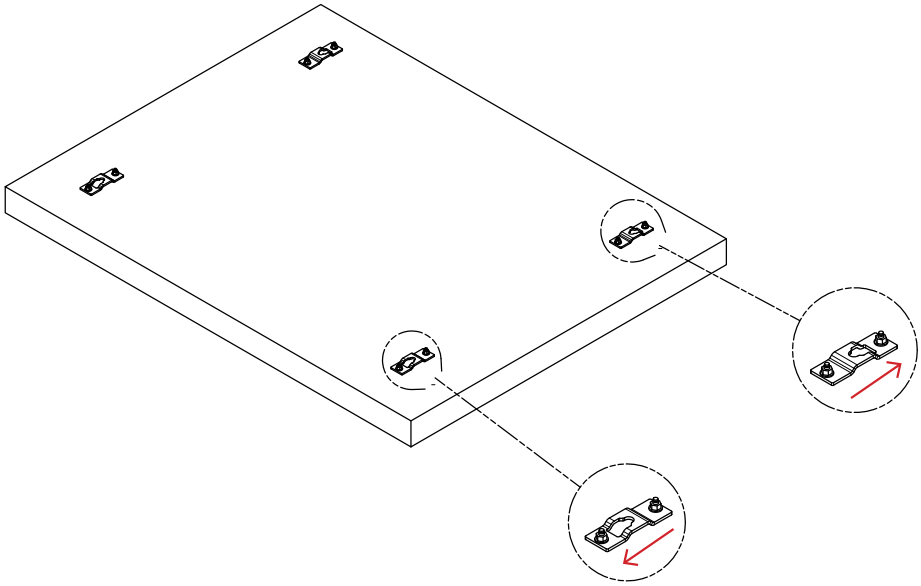

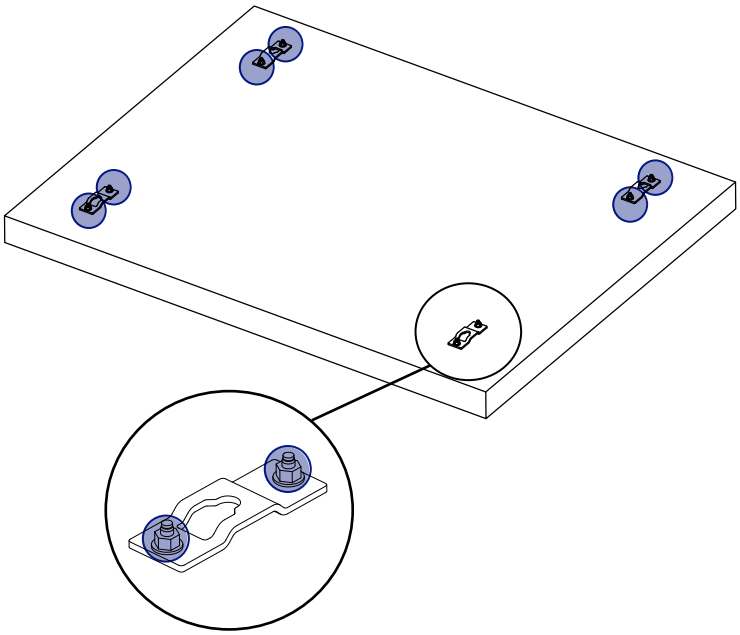

STOP

For pods with professional installation: Once you've drilled the holes and installed the anchors and seismic brackets, please email **service@avapods.com** to let us know. Our certified third-party installers will contact you to schedule a time to complete the pod installation onto the anchoring system and ensure it's properly anchored. Your work is done! **Please store the part 2 components and have them available for the installers. We also recommend placing the drill template back on the floor and blocking off the area for safety until the pod assembly is complete.**

For self-installed pods: Please reference the Mamava XL Assembly Instructions and complete steps 1 - 4 in Frame, Chassis + Seat Bases. Return to part 2 of this document once the floor frame is in place to complete the pod assembly and seismic anchoring. **If you are not continuing the assembly process immediately, please store the part 2 components and have them available when you return to assembly. We also recommend placing the drill template back on the floor and blocking off the area for safety until the pod assembly is complete.**

Assemble Floor Frame + Pod Chassis

PART 2

TOOLS AND PARTS

- Phillips Head Screwdriver
- Ratchet + 10 mm Socket
- Ratchet + 9/16″ Socket
- 5 mm Hex Wrench

1. When you get to Frame, Chassis + Seat Bases in the XL V6 Assembly Guide, complete steps 1-4.

2. Using a #2 Philips screwdriver and 10 mm socket, remove caster wheels from chassis by removing (8) Philips screws, lock washers, and nuts. (4 per side).

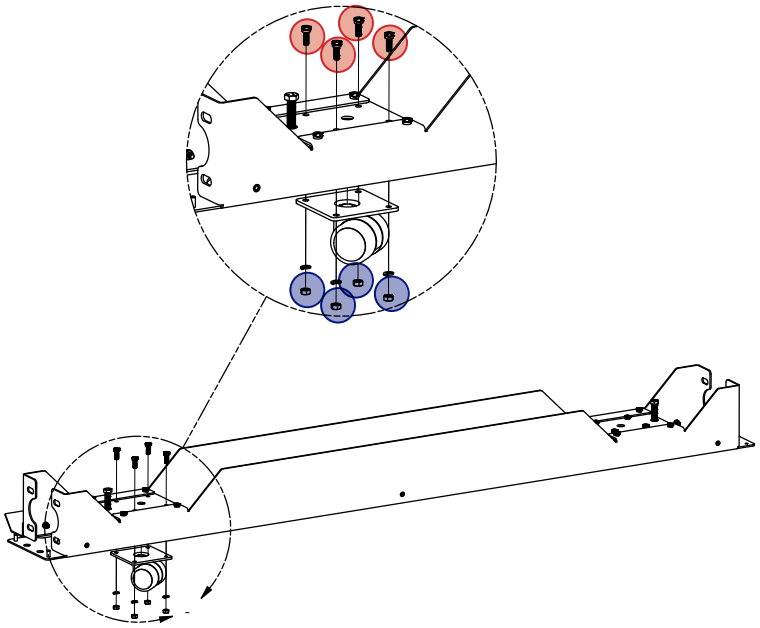

3. Using a 9/16″ socket or wrench, lower all leveling feet so the chassis is in the tallest position.

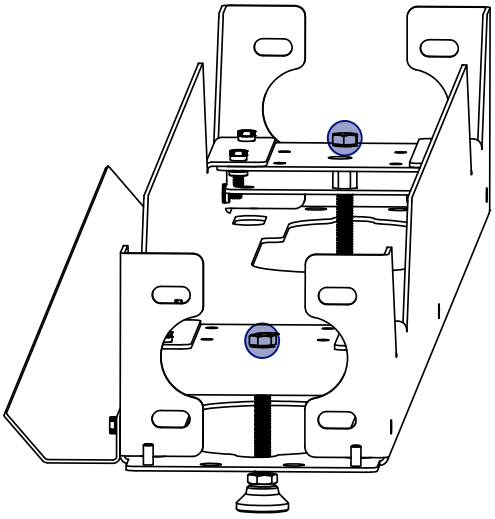

4. Remove one leveling foot bracket from the chassis by removing 4xM6 socket head cap screws using a 5 mm hex wrench (only one bracket needs to be removed per chassis side).

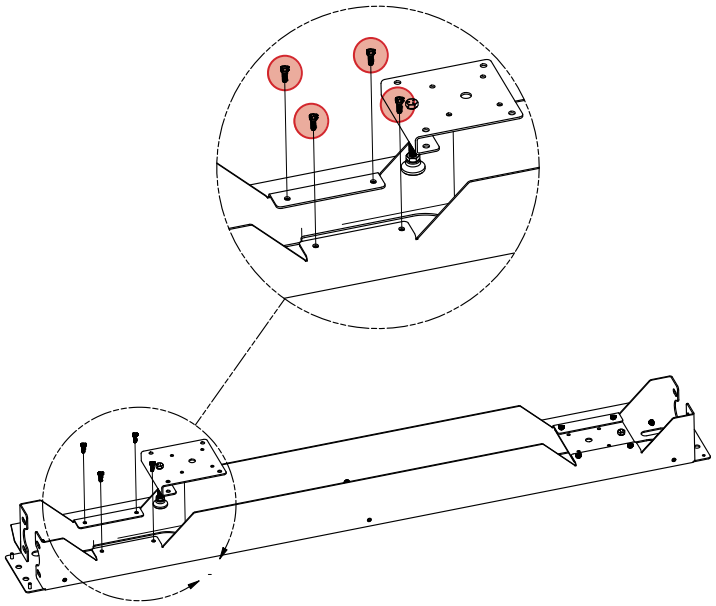

5. Place chassis over seismic brackets, then slide the remaining installed leveling foot inside the bracket slot.

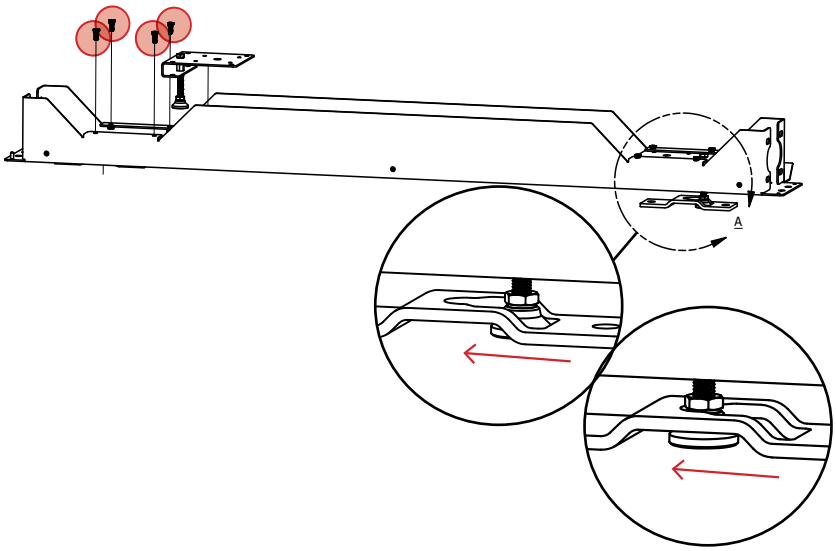

6. Tilt the chassis end up that does not have leveling foot installed.

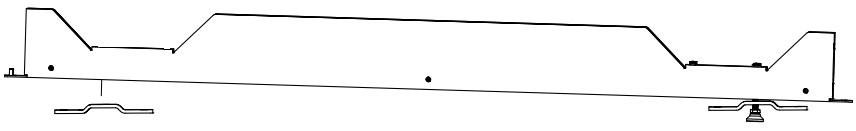

7. Replace the loose leveling foot bracket that was removed in step 3 underneath the top flanges of the chassis, and slide the leveling foot into the seismic bracket slot.

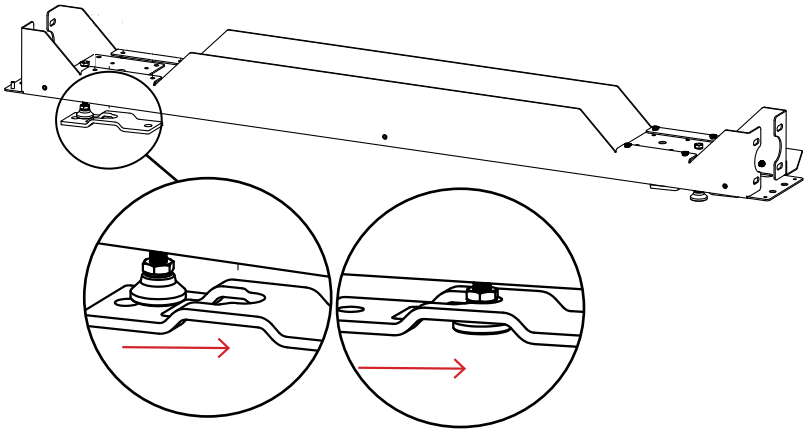

8. Using a 5 mm hex wrench, reinstall the 4xM6 socket head cap screws for the leveling foot bracket.

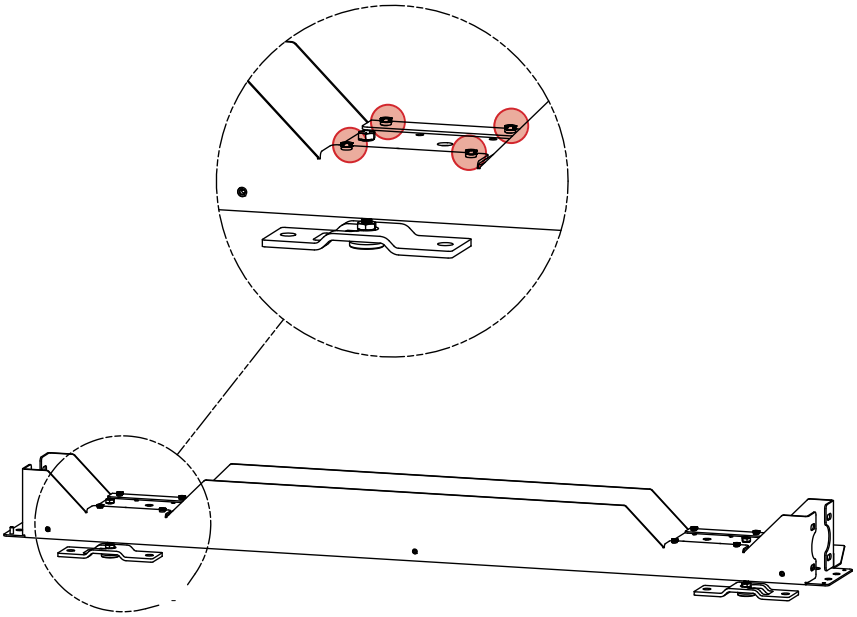

9. Repeat steps 2-6 for both chassis sides.

10. Resume pod installation instructions.

DON'T FORGET

If you're listing this pod on the free Mamava app—so breastfeeding parents can find it using Mamava's Smart Access—please send photos of the installed pod to **fulfillment@avapods.com**.

Notes